Buttress Application for These Enclosures:

PTE3/PSE3

PTETE3/PTESE3
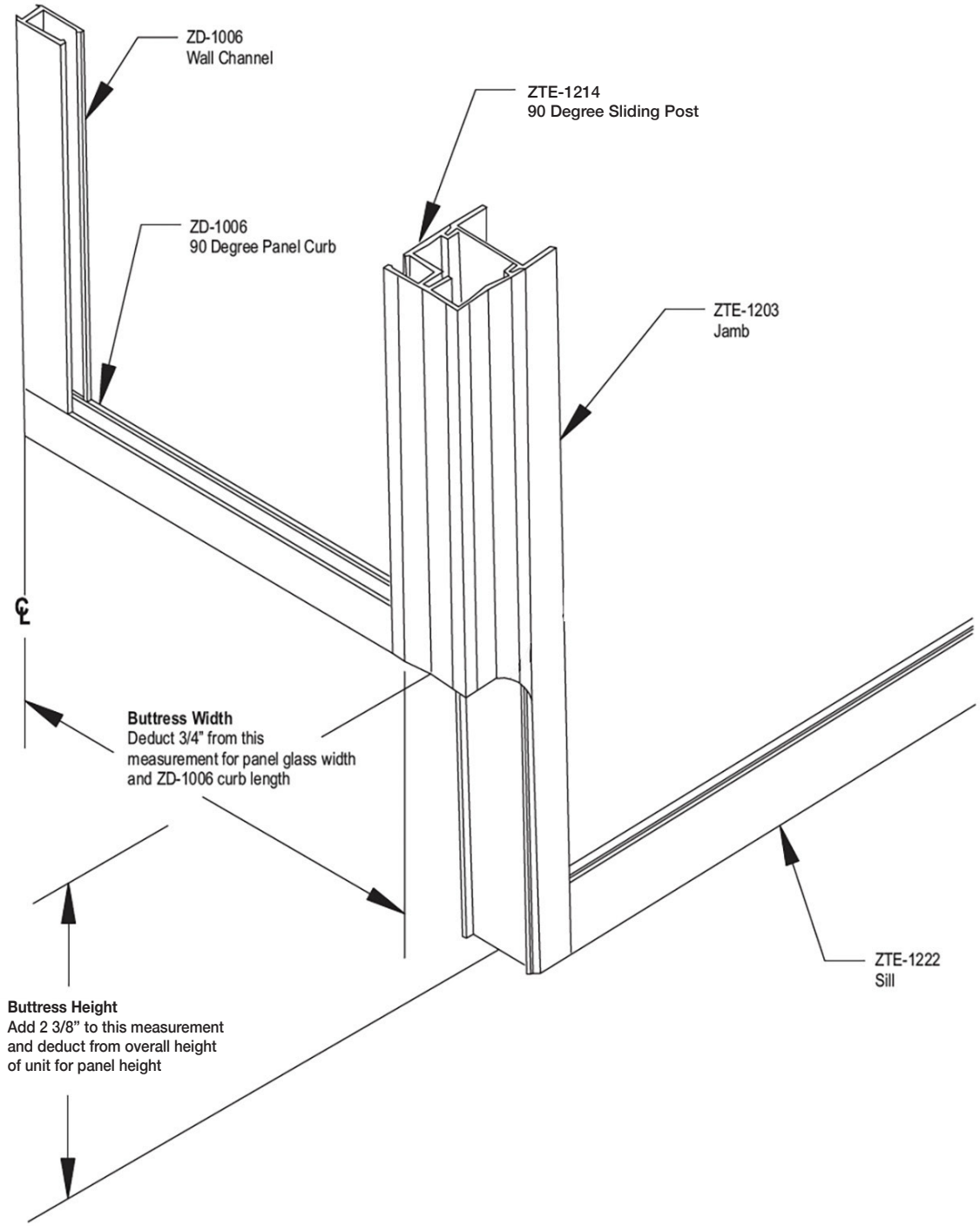
PRETE3/PRESE3